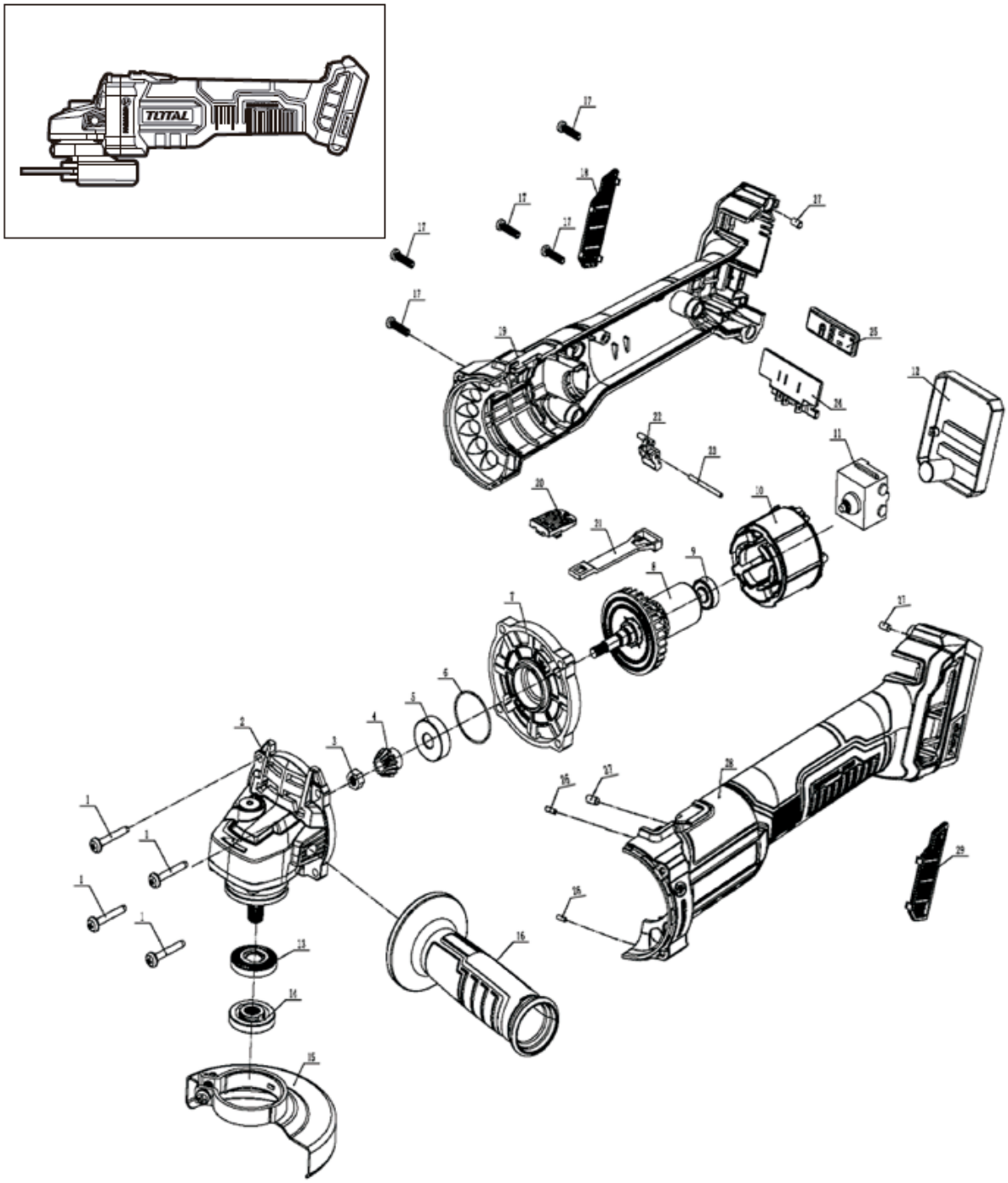Despiece